NOTE: Parts are no longer available for this tool.

The manual will continue on the next page.

PARTS LIST

INSTRUCTIONS

Sioux Valve Face Grinding Machines

No. 680

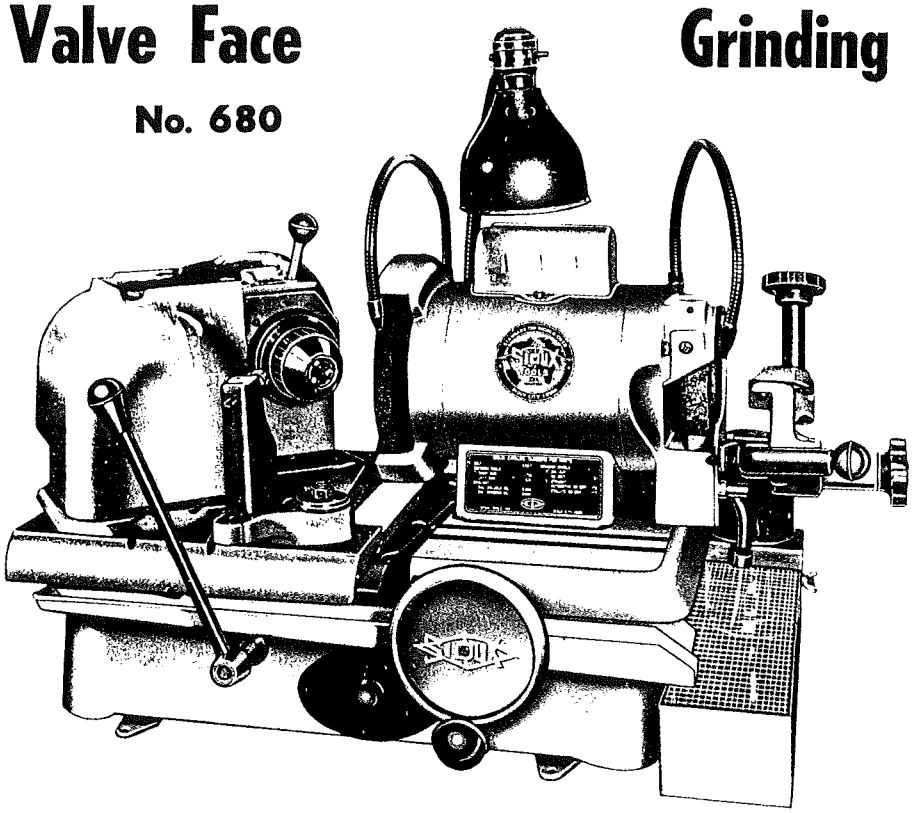

No. 680

Prepare Machine For Operation

1. Wipe off shipping grease, clean thoroughly.
2. Remove the hex nut which locks the chuck carriage plate during shipping.
3. **Lubrication:** Put a few drops of SAE 20 oil in each oiler every three months or 50 hours of operation. See illustration for oiler locations. Grinding motor is permanently lubricated and sealed. Oil pump motor and chuck motor every six months. See illustration for location of oilers.
4. **Coolant:** Use Sioux grinding oil No. 250 which comes ready for use—do not dilute, or Sioux concentrated soluble oil No. 632 mixed according to directions. Coolant tank capacity: 3 qts.
5. Run the machine for a while, with chuck motor and pump motor on to warm up and distribute lubricant.
6. Attach dressing tool as shown. (SEE INSTRUCTIONS FOR DRESSING WHEELS.)

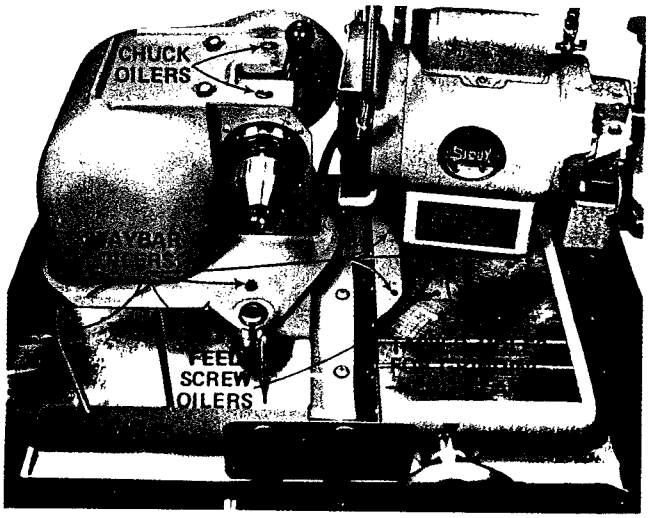

SIOUX TOOLS INC.

SIOUX CITY, IOWA, U.S.A. 51102

FORM A360—1-74

PRINTED IN U.S.A.

Grounding Instructions

This tool should be grounded while in use to protect the operator from electric shock.

1. Cord-Connected Tools

   The tool is equipped with an approved three-conductor cord and a three-prong grounding type plug to fit the proper grounding type receptacle. The green (or green and yellow) conductor in the cord is the grounding wire. Never connect the green (or green and yellow) wire to a live terminal. If your unit is for use on less than 150 volts it has a plug like that shown in Figure A. If it is for use on 150-250 volts, it has a plug like that shown in Figure D. An adapter, Figures B and C, is available for connecting Figure "A" plugs to two-prong receptacles. The green-colored rigid ear, lug, etc., extending from the adapter must be connected to a permanent ground such as a properly grounded outlet box. No adapter is available for a plug as shown in Figure D.

   Use only three-wire extension cords that have three-prong grounding type plugs and three-pole receptacles that accept the tool plug.

   Replace or repair damaged or worn cord immediately.

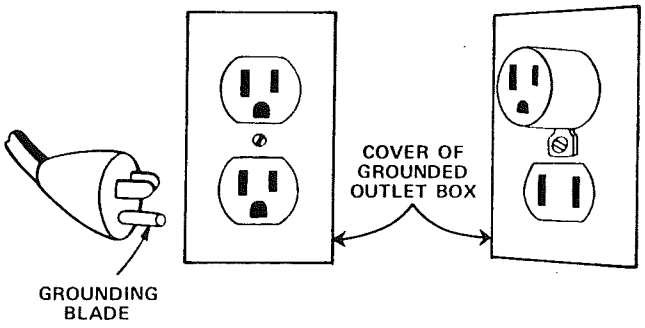

FIGURE A

FIGURE B

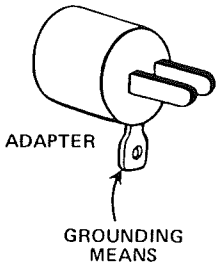

FIGURE C

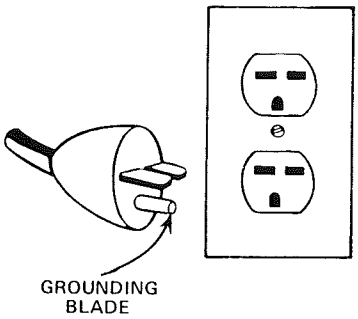

FIGURE D

Safety Instructions

1. Always handle grinding wheels carefully. Do not use a wheel which has been dropped.
2. Visually inspect all wheels for possible damage before mounting. Replace cracked wheel immediately.
3. Use only wheel flanges and flange screws furnished with this grinder: (Left flange screw has left hand thread); (Right flange screw has right hand thread).
4. Keep wheel shields in place, properly secured.
5. Remove adjusting keys and wrenches before turning on.
6. Allow newly mounted wheels to operate at least one full minute before using. Do not stand in front of wheel during this period.
7. Use safety glasses when dressing the wheels or grinding.
8. Do not operate the machine without chuck belt guard.
9. Keep machine and work area clean. Cluttered areas invite accidents.

Dressing Left Wheel
(Cat. No's. 182 & 177)

Position chuck carriage to extreme left. Adjust diamond holder in post so that the diamond has about 3/8" overhang in front of post. Place attachment with diamond slightly clearing the wheel periphery, pointing at a slight angle to the wheel face and about 1/8" to the left of the wheel. Firmly tighten the attachment to the chuck carriage plate. The amount of diamond overhang should be kept to a minimum in order to maintain as rigid a support as possible. The rubber chuck shields (631B) should be used to protect the chuck from wheel grit while dressing or grinding. Start the machine and advance the grinding wheel carefully to prevent gouging. See illustration.

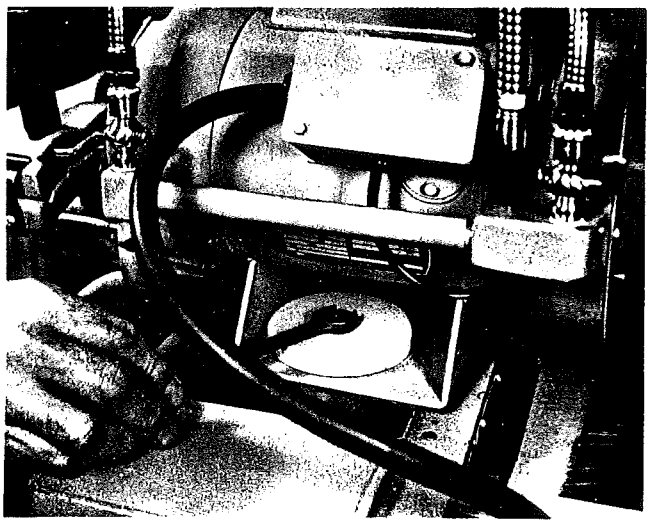

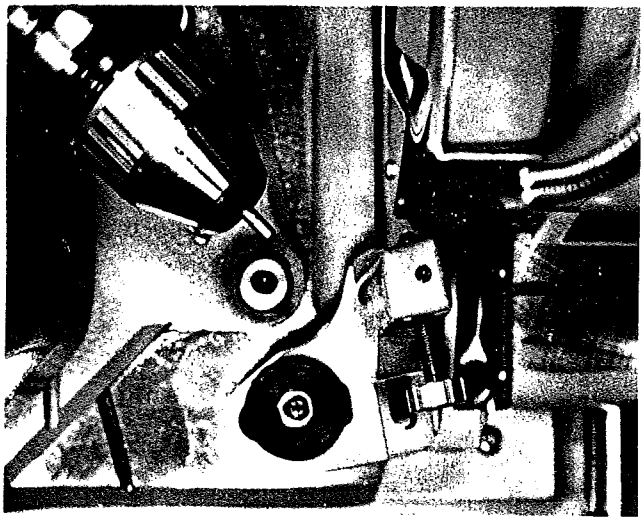

After adjusting diamond for dressing, apply coolant. Pass the diamond over the wheel while feeding cuts of .0005" or less per pass. Feed screw mirometer thimble is graduated in increments of .001". The diamond should occasionally be rotated slightly to present a new cutting edge. A rapid traverse of the diamond will result in a rough condition which is excellent for fast stock removal but poor for finish, but is sometimes used to make a hard wheel cut more freely. However, if this is continually necessary, the softer grade wheel (Cat. No. 177) should be used.

Dress wheel to clean up each time the grinding head is repositioned or when a new wheel is installed. Be sure the grinding head clamp is securely tightened before dressing or grinding. See illustration at top of next column.

Valve Reconditioning

1. **True Valve Stem Ends:** To insure proper valve operation, square valve stem ends after dressing right grinding wheel and renew chamfer with chamfering vee. The chamfer need not exceed 1/32" inch. See illustrations.

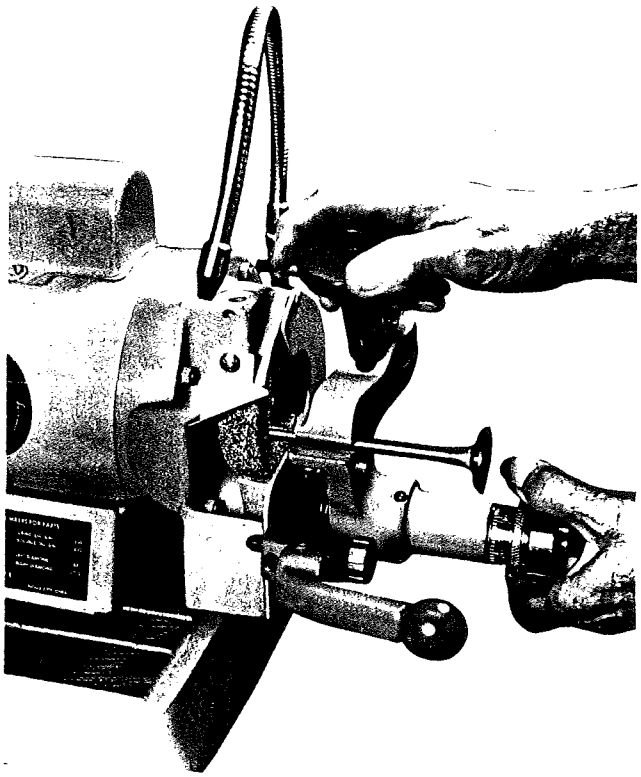

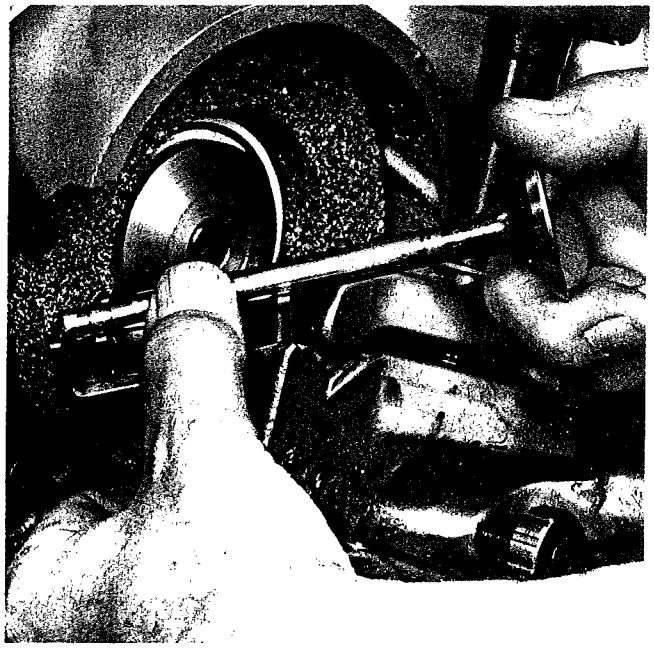

Chamfering Vee

2. Dress left grinding wheel. See instructions.

3. Locate chuck head at the exact angle you wish to refinish valve, then lock chuck head clamp. Chuck head is calibrated precisely from 0° to 45° including 44° and 29° interference angles. See illustration for grinding head position for 0° setting.

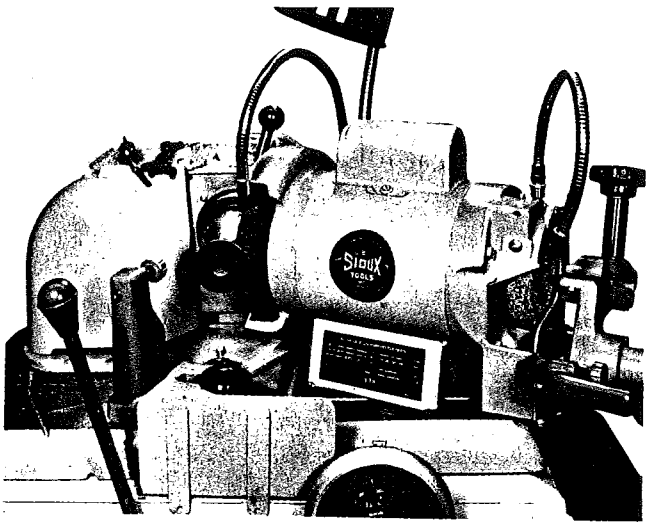

4. **Chuck Valve:** Open chuck sleeve and insert valve so that rollers will engage the stem just above the worn area. Close chuck sleeve to contact stem. Adjust aligner to contact end of stem. Pull lever back and close chuck sleeve, then back sleeve off slightly. Press valve firmly back into aligner with slight rotary motion and release lever. The chuck will now accept all valves of same size without further adjustment. With roller sleeve type chuck, tighten by hand to desired tension.

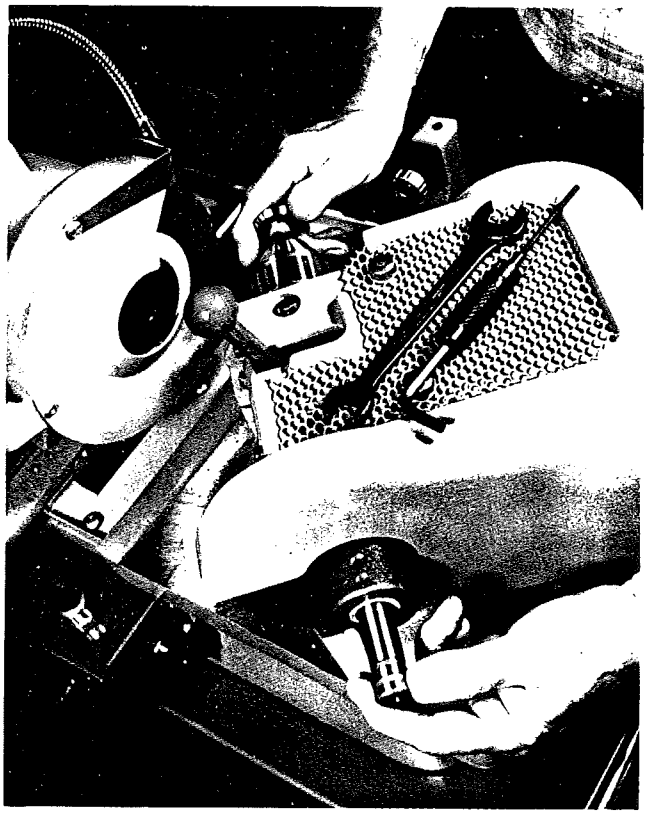

5. **Grind Valves:** Position grinding head so that valve face will traverse the full width of the wheel. Please note that the grinding head may assume an angular position on its cross slide so that the valve face may pass to the right without touching the throat of the valve on the left side of the wheel and provide clearance between chuck sleeve and wheel guard. Tighten grinding head clamp. See illustration top of column next page.

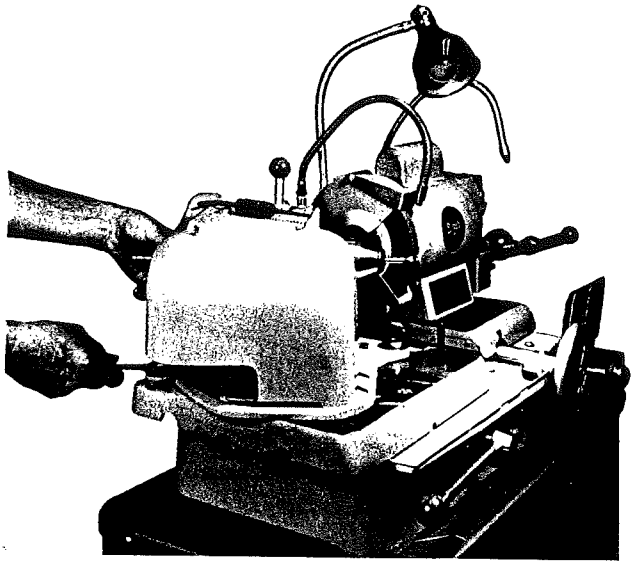

Set the chuck carriage plate stop nut, located under the left skirt, so that the valve face will just reach the right edge of the grinding wheel but never go beyond. Dress grinding wheel to clean up. (SEE INSTRUCTIONS FOR DRESSING). Advance grinding wheel towards valve until wheel just touches valve. Set micrometer thimble at zero. Begin grinding at left side of wheel, moving valve slowly and steadily, right and left, across the wheel.

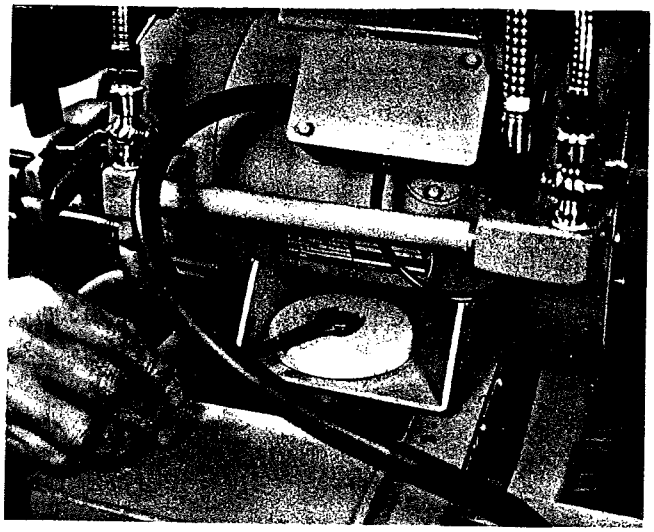

DO NOT ALLOW VALVE AT ANYTIME TO PASS BEYOND EITHER EDGE OF THE GRINDING WHEEL WHILE GRINDING. Take light cuts by feeding the wheel up to the valve about .001"-.002" at a time. Remove just enough material to make a clean smooth face. When valve face is trued, advance to right until top edge of valve is flush with right edge of grinding wheel. Pause a second, then back grinding wheel away from valve, **NOT VALVE AWAY FROM WHEEL.** Keep valves in numbered rack to make sure you return them to their own guides.

On large diameter and hard faced valves, it may be necessary to make a finish dress of the grinding wheel for a finish grind. **Do not remove the valve from the chuck.** Position the dressing tool between valve and wheel so that a complete traverse of the grinding wheel can be made without contact of valve to grinding wheel. Again, as noted in dressing instructions, for hard faced valves, use the softer grade wheel (Cat. No. 177).

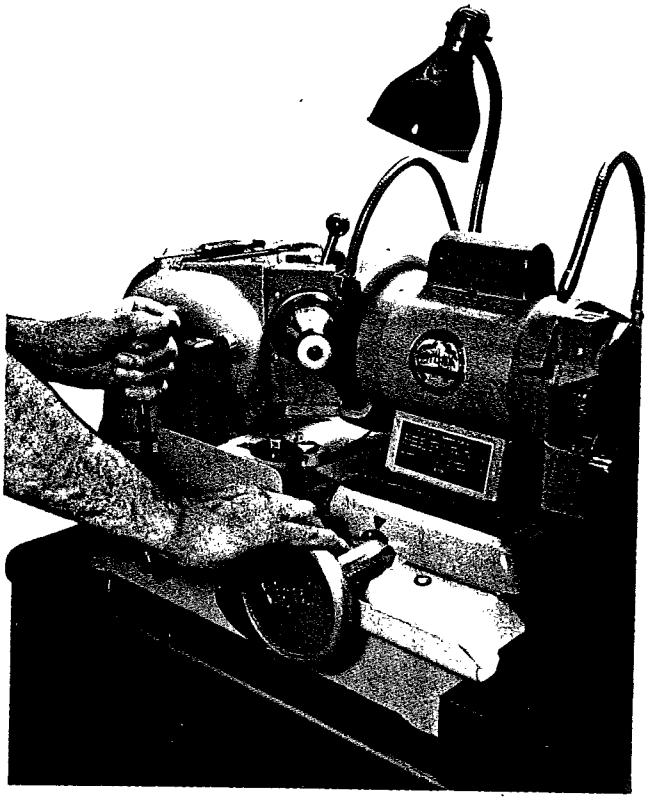

Good housekeeping is essential to keep any precision tool in condition. Use the rubber shields (No. 631B) when grinding or dressing to keep grit and coolant out of chuck. The chuck on your machine has been factory adjusted to grind valves within .001" T.I.R. concentrically. Keep it that way.

Cross Slide for 680, 684, 689

Furnish Machine and Serial Number When Ordering Parts

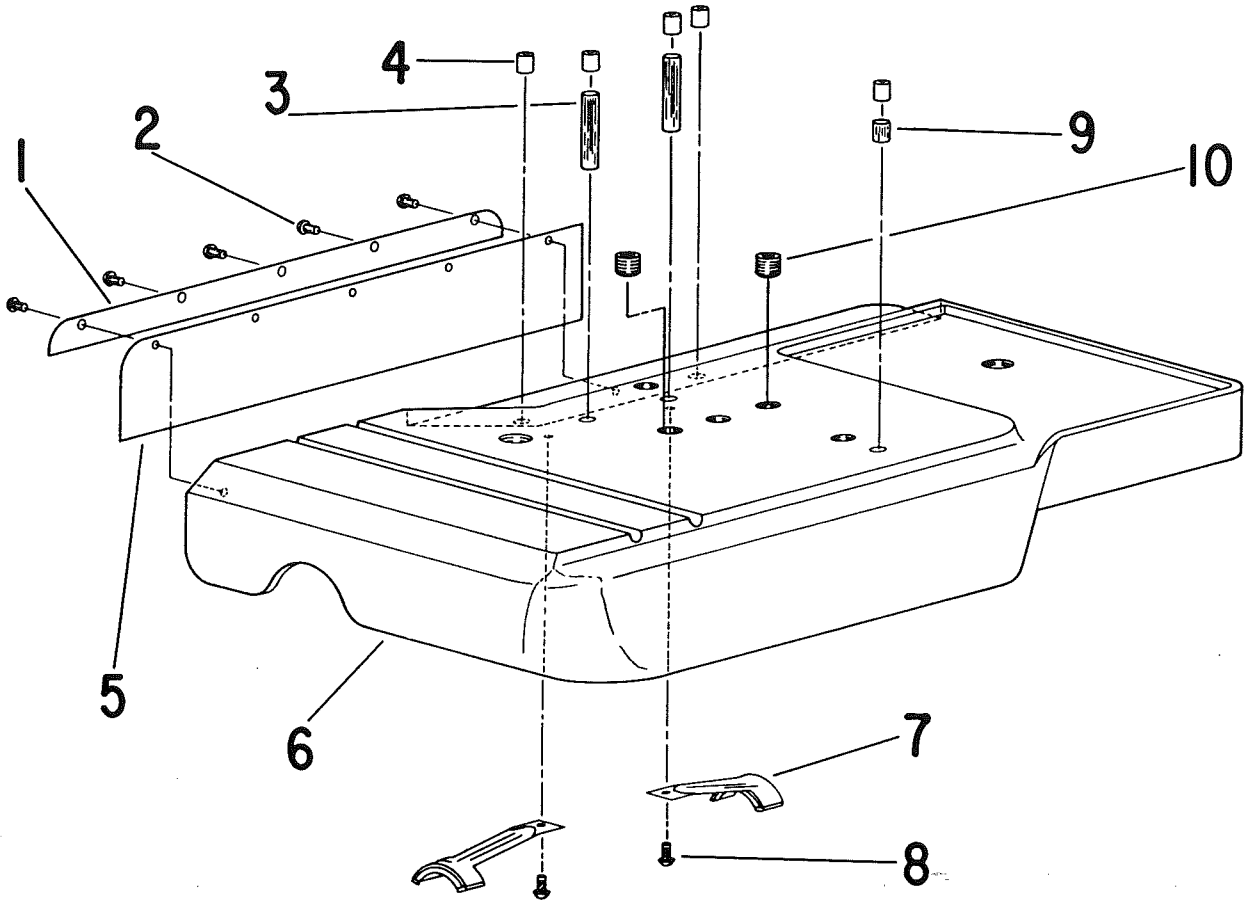

Figure	Part No.	Name
1	25193	Strip—Guard
2	06361	Screw—Self Tap (5)*
3	05015	Wick—Felt (2)*
4	30073	Cup—Oil (5)*
5	14214	Seal—Guard
6	11418	Slide—Cross
7	23158	Assy.—Oil Dispenser (2)*
8	09951	Screw—Drive (2)*
9	14685	Wick—Felt
10	09013	Screw—Socket (2)*

COMPLETE ASSY.

53532 Assy.—Cross Slide
(Includes All Above Parts)

*Order Quantity As Needed

SIOUX TOOLS INC.
SIOUX CITY, IOWA, U.S.A. 51102

PRINTED IN U.S.A.

649 Dressing Tool

Furnish Machine and Serial Number When Ordering Parts

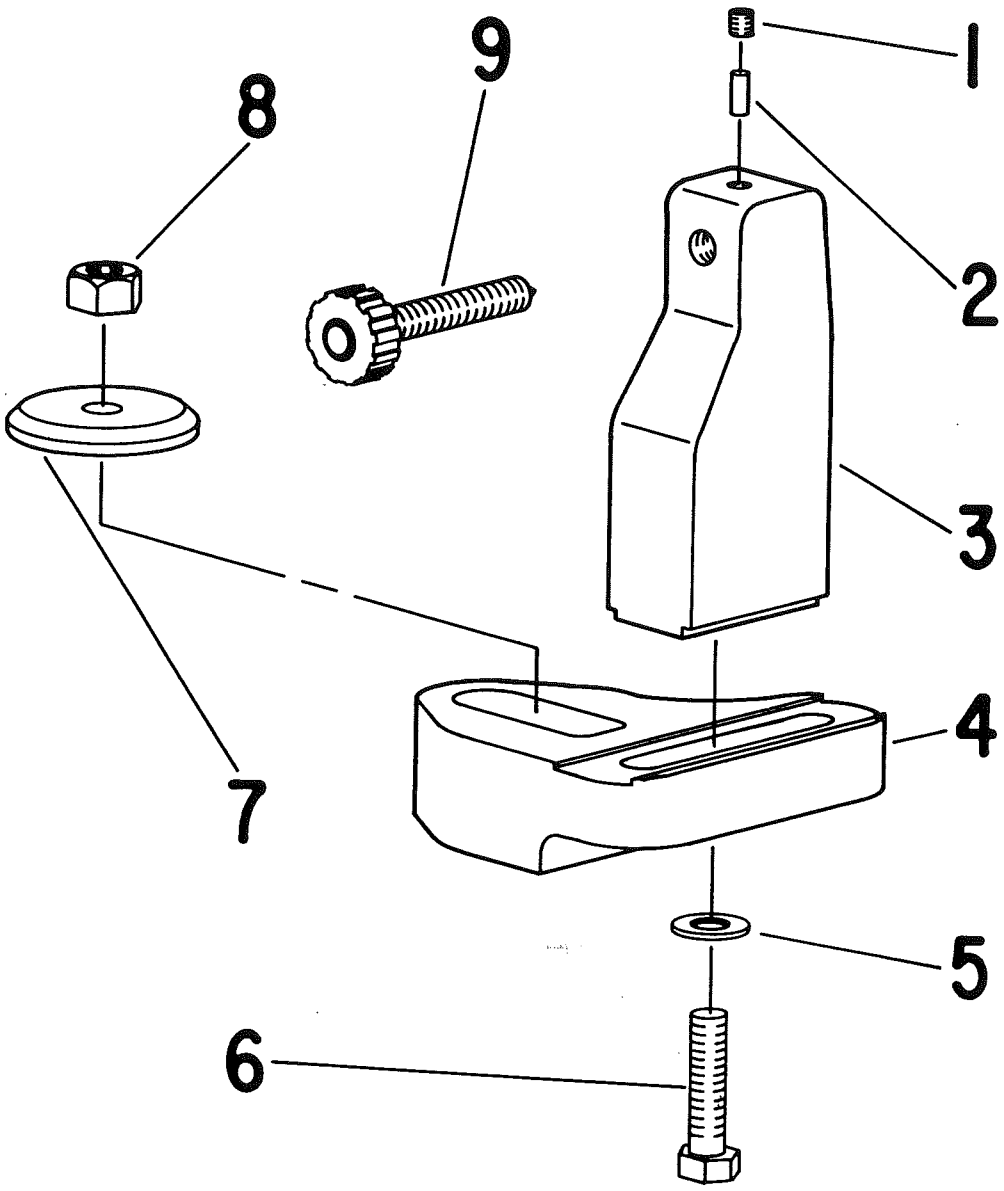

Figure	Part No.	Name
1	08001	Screw—Set
2	04253	Slug—Friction
3	11427	Post—Diamond Holder
4	11421	Base—Dressing Tool
5	25154	Washer
6	09106	Screw—Hex Hd. Cap
7	54443	Washer
8	09590	Nut 3/8"
9	1715	Diamond—Dressing

SIOUX TOOLS INC.
SIOUX CITY, IOWA, U.S.A. 51102

PRINTED IN U.S.A.

Junction Box for 680, 684 & 689
115V. & 230V.
Single Phase

Furnish Machine and Serial Number When Ordering Parts

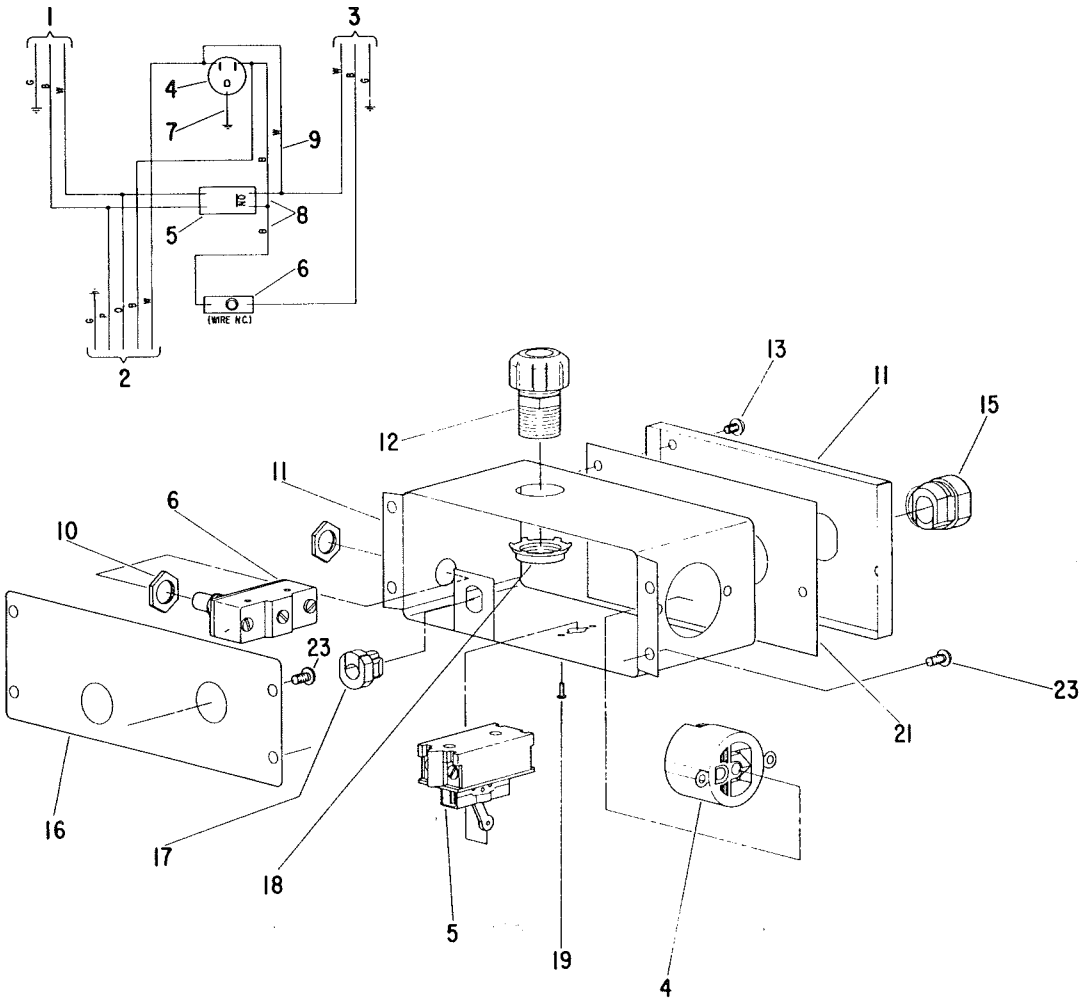

Figure	Part No.	Name
1	18505	Supply Cord (Specify Voltage)
2	18867	5 Cond. Cord (Grinding Head)
3	18871	3 Cond. Cord (Chuck Motor)
4	18799	Receptacle (115V.)
	18877	Receptacle (230V.)
5	18190	Switch—Toggle
6	18203	Switch—Limit
7	18872	Assy.—Ground Wire (Green)
8	18874	Assy.—Lead Wire (2)* (Black)
9	18873	Assy.—Lead Wire (White)
10	30690	Nut—Lock (2)*
11	53617	Assy.—Junction Box & Cover (Incl. Figs. 13 & 21)
12	18659	Connector—Strain Relief
13	07200	Screw—Phil. Rd. Hd. (2)*
15	14848	Strain Relief Bushing
16	05009	Gasket—Junction Box
17	14853	Strain Relief Bushing
18	18658	Locknut
19	06030	Screw—Phil. (2)*
21	05010	Gasket—Cover
23	07205	Screw (5)*

*Order Quantity As Needed

SIOUX TOOLS INC.
SIOUX CITY, IOWA, U.S.A. 51102

PRINTED IN U.S.A.

Junction Box for 680, 684 & 689
208-220V.
3 Phase

Furnish Machine and Serial Number When Ordering Parts

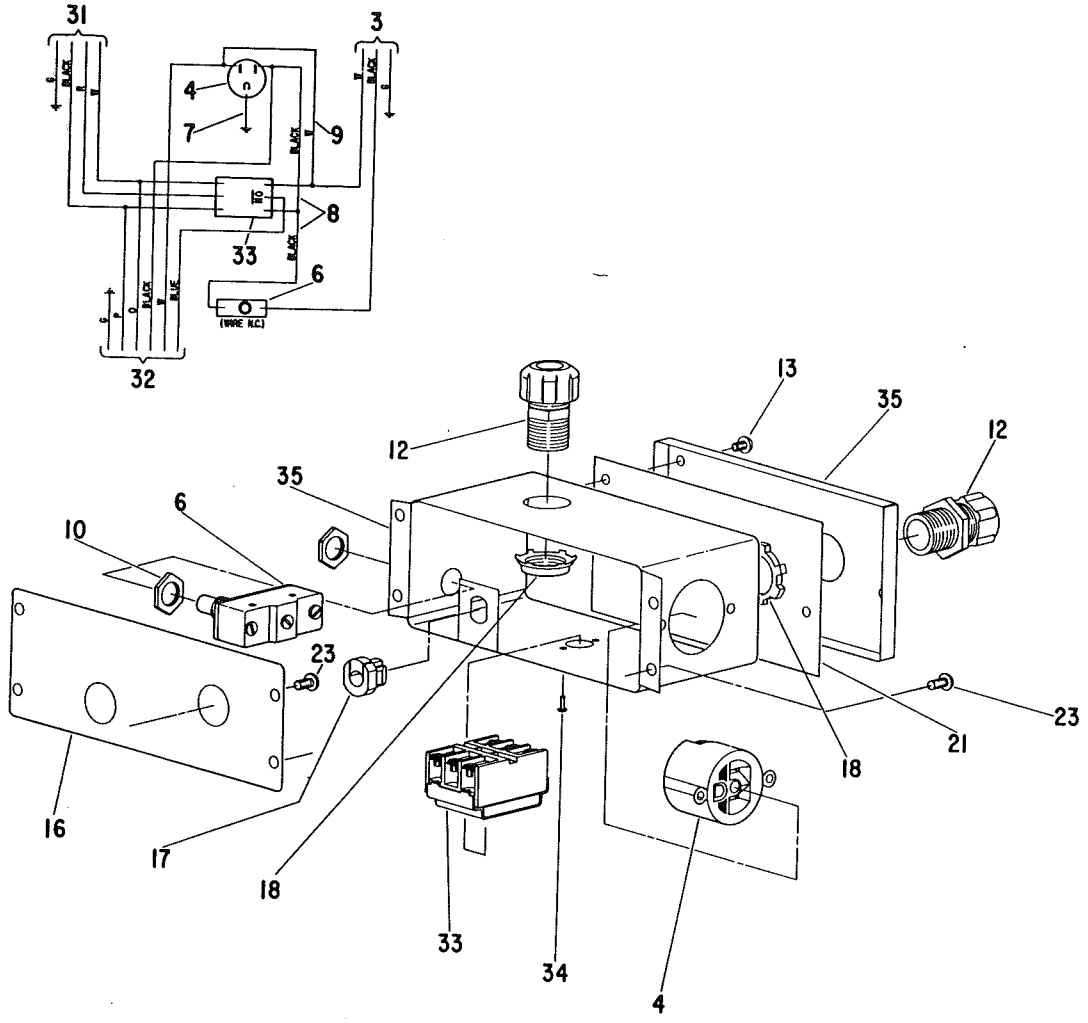

Figure	Part No.	Name
3	18871	3 Cond. Cord (Chuck Motor)
4	18877	Receptacle
6	18203	Switch—Limit
7	18872	Assy.—Ground Wire (Green)
8	18874	Assy.—Lead Wire (2)* (Black)
9	18873	Assy.—Lead Wire (White)
10	30690	Nut—Lock (2)*
12	18659	Connector—Strain Relief (2)*
13	07200	Screw—Phil. Rd. Hd. (2)*
15	14848	Strain Relief Bushing
16	05009	Gasket—Junction Box
17	14853	Strain Relief Bushing
18	18658	Locknut (2)*
21	05010	Gasket—Cover
23	07205	Screw (5)*
31	18879	Supply Cord
32	18880	6 Cond. Cord (Grinding Head)
33	18199	Switch—Toggle
34	06235	Screw—Phil. (2)*
35	53618	Assy.—Junction Box & Cover (Incl. Figs. 13 & 21)

*Order Quantity As Needed

SIOUX TOOLS INC.
SIOUX CITY, IOWA, U.S.A. 51102

Grinding Head for 680, 684 & 689

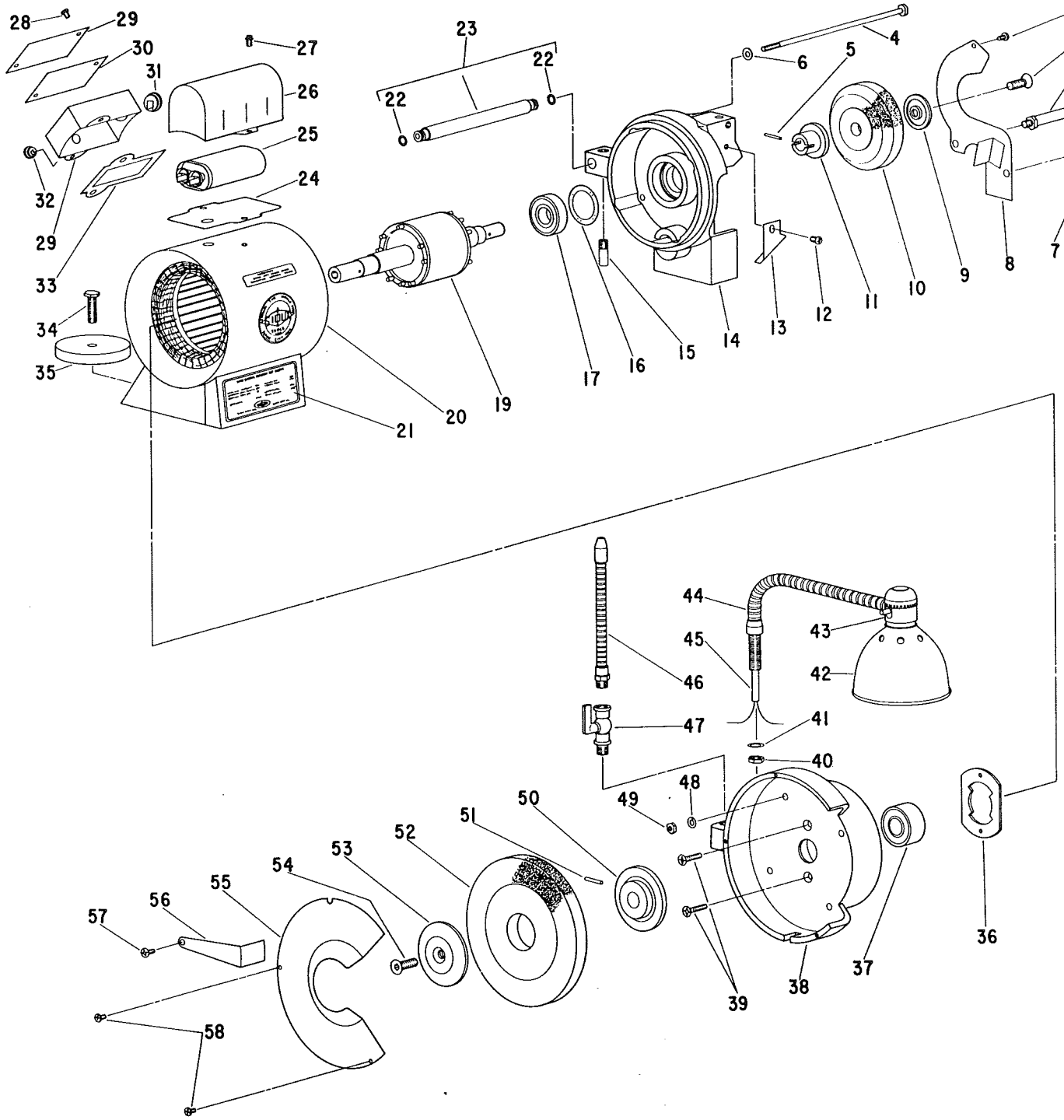

Furnish Machine and Serial Number When Ordering Parts

Grinding Head for 680, 684 & 689

Furnish Machine and Serial Number When Ordering Parts

Figure	Part No.	Name
1	54437	Stop—Long
2	09095	Screw—Flat Hd. Socket
3	07225	Screw—Phil. Pan Hd.
4	08295	Bolt—Thru (4)*
5	30747	Pin—Roll (Right End)
6	25210	Washer (4)*
7	54438	Stop—Short
8	35350	Cover—Right End
9	24171	Flange—Grinding Wheel
10	81	Wheel—Grinding
11	54409	Flange—Inner
12	08275	Screw—Phil. Rd. Hd.
13	35357	Deflector
14	11422	End Shield (Right End)
15	30734	Adaptor—Tube
16	41298	Washer—Thrust
17	10232	Bearing—Ball
19	16123	Rotor & Shaft (Specify Voltage & Phase)
20	17123	Assy.—Stator & Base (Incl. Fig. 21) (Specify Voltage & Phase)
21	20929	Plate—Parts List
22	04252	Ring—"O" (2)*
23	53578	Assy.—Coolant Tube
24	05013	Gasket—Capacitor Case
25	18876	Capacitor
26	35372	Case—Capacitor
27	06410	Screw (2)*
28	06673	Screw (2)*
29	35316	Box—Conduit
30	05014	Gasket—Conduit Cover
31	14855	Bushing—Strain Relief
32	14856	Bushing—Strain Relief
33	05012	Gasket—Conduit Box
34	09104	Screw—Hex Hd.
35	11426	Clamp—Grinding Head
36	35373	Lockplate
37	10279	Bearing—Ball
38	11423	End Shield (Left End)
39	08176	Screw—Flat Head (2)*
40	09635	Nut—Hex Jam
41	09804	Washer—Lock
42	18964	Reflector—Plastic
43	18965	Socket—Bulb
44	18798	Assy.—Flexible Light (Incl. Figs. 40, 42, 43 & 45)
45	14854	Tubing—Insulation
46	53509	Assy.—Coolant Tube (2)*
47	30731	Valve (2)*
48	09751	Washer—Lock (4)*
49	09495	Nut (4)*
50	54408	Flange—Inner
51	30748	Pin—Roll (Left End)
52	182	Wheel—7" Grinding (For General Grinding)
	177	Wheel—7" Grinding (For Grinding Stellite)
53	54407	Flange—Outer
54	09096	Screw—Flat Hd. Socket
55	35351	Cover—Left End
56	35352	Shield—Air
57	08279	Screw—Phil. Rd. Hd.
58	07225	Screw—Phil. Pan Hd. (2)*
	18911	Bulb—Light (115V.)
	18988	Bulb—Light (230V.)

COMPLETE ASSY.

53523	Assy.—Grinding Head (Every thing except Light Bulb & 34 & 35) (Specify Voltage & Phase)
53290	Assy.—Grinding Head (Incl. Fig's. 4-6, 14, 16-30, 33, 36-39, 48, 49 & 51) (Specify Voltage & Phase)

* Order Quantity Needed

SIOUX TOOLS INC.
SIOUX CITY, IOWA, U.S.A. 51102

PRINTED IN U.S.A.

Chuck for 680 Machine (Cap. .230" to 11/16")
Chuck for 684 Machine (Cap. 5/16" to 3/4")
Special Small Capacity Chuck 680-4 AE (Cap. .170" to 9/16")

Furnish Machine and Serial Number When Ordering Parts

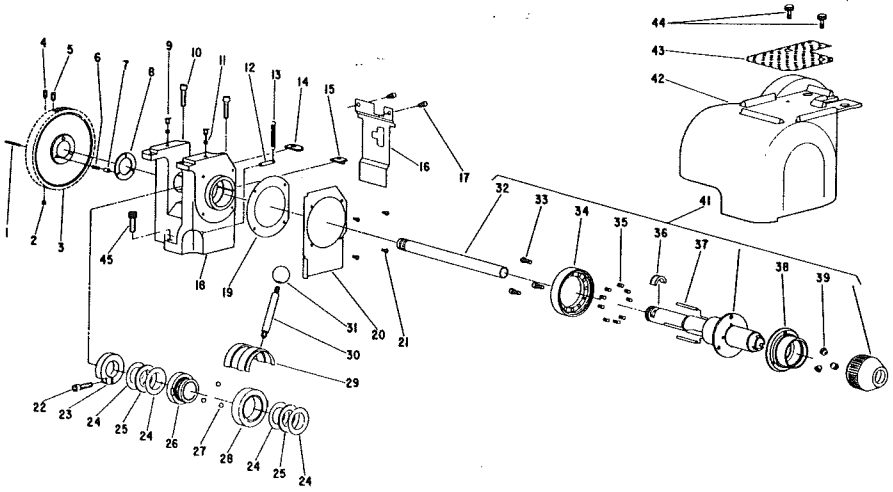

Figure	Part No.	Name
1	24829	Key—Chuck Collar
2	08021	Screw—Set (1/4" Cup Point)
3	11419	Pulley—Chuck Spindle
4	08032	Screw—Set (1/4" Dog Point)
5	08605	Screw—Set (5/16" Dog Point)
6	21315	Spring (3)*
7	54329	Rod—Push (Pulley) (3)*
8	35321	Washer—Thrust
9	30052	Cup—Oil (2)*
10	08798	Screw—Socket Hd. Cap (5/16") (2)*
11	14685	Wick—Felt (2)*
12	54401	Post—Spring
13	41290	Spring
14	14766	Shim—Chuck Head (Rear)
15	05003	Shim—Chuck Head (Front)
16	35325	Plate—Cover
17	08287	Screw—Socket Hd. Cap (1/4") (2)*
18	53566	Head—Chuck (Incl. Figs. 10, 14 & 15)
19	04245	Gasket—Dust. Shield
20	35342	Shield—Chuck Head Dust (680)
	35343	Shield—Chuck Head Dust (684)
	35326	Shield—Chuck Head Dust (680-4AE)
21	06673	Screw (#8) (4)*
22	08794	Screw—Socket Hd. Cap (5/16")
23	54333	Clamp
24	10058	Race—Needle Thrust (4)*
25	10057	Bearing—Needle Thrust (2)*
26	11592	Cam—Stationary
27	53555	Assy.—Ball (Set of 3)
28	11593	Cam—Rotating
29	35341	Shield—Chuck Cam
30	54319	Handle—Lever
31	14008	Grip—Ball
32	24953	Aligner (680 & 684)
	24953M	Aligner (680-4AE)
33	08232	Screw—Socket Hd. Cap (1/4") (3)*
34	24951	Retainer—Spring
35	53615	Spring (Set of 9)
36	24957	Key—Thrust
37	54322	Rod—Push (4)*
38	24950	Ring—Adjustment
39	24185	Roller—Chuck (680 & 684) (Set of 3)
	34447	Roller—Chuck (680-4AE) (Set of 3)
41	53559	Assy.—Chuck & Aligner (680)
	53560	Assy.—Chuck & Aligner (684)
	53561	Assy.—Chuck & Aligner (680-4AE)
42	12379	Hood—Chuck Head
43	04247	Mat
44	08293	Screw—Thumb (2)*
45	09074	Screw—Socket Hd. Cap. (3/8") (3)

COMPLETE ASSY.

	53404	Assy.—Chuck (Incl. Figs. 1 thru 41) (680) (Cap. .230" to 11/16")
	53405	Assy.—Chuck (Incl. Figs. 1 thru 41) (684) (Cap. 5/16" to 3/4")
	53406	Assy.—Sp. 680-4 AE Chuck (Incl. Figs. 1 thru 41) (Cap. .170" to 9/16")

*Order Quantity As Needed

SIOUX TOOLS INC.
SIOUX CITY, IOWA, U.S.A. 51102

Chuck for 689 Machine
(Cap. .230" to 5/8")

Furnish Machine and Serial Number When Ordering Parts

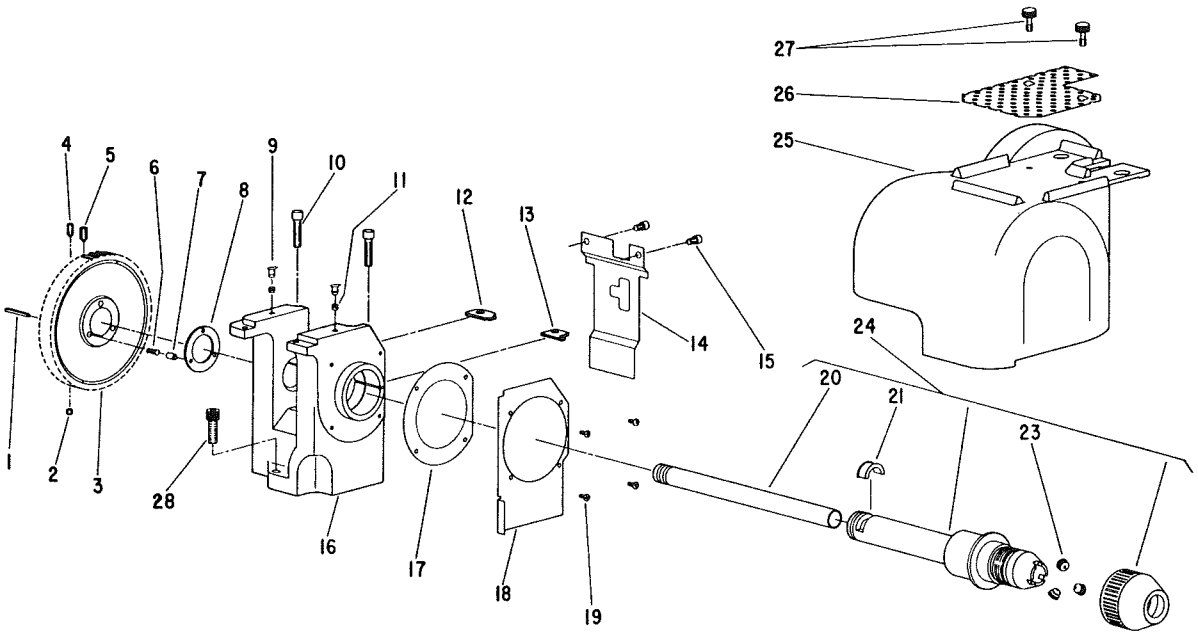

Figure	Part No.	Name
1	24829	Key—Chuck Collar
2	08021	Screw—Set (1/4" Cup Point)
3	11419	Pulley—Chuck Spindle
4	08032	Screw—Set (1/4" Dog Point)
5	08605	Screw—Set (5/16" Dog Point)
6	21315	Spring (3)*
7	54329	Rod—Push (Pulley) (3)*
8	35321	Washer—Thrust
9	30052	Cup—Oil (2)*
10	08798	Screw—Socket Hd. Cap (5/16") (2)*
11	14685	Wick—Felt (2)*
12	14766	Shim—Chuck Head (Rear)
13	05003	Shim—Chuck Head (Front)
14	35325	Plate—Cover
15	08287	Screw—Socket Hd. Cap (1/4") (2)*
16	53566	Head—Chuck (Incl. Figs. 10, 12 & 13)
17	04251	Gasket—Dust Shield
18	35369	Shield—Chuck Head Dust
19	06673	Screw—Phil. (4)*
20	24953	Aligner
21	24957	Key—Thrust
23	24185	Roller—Chuck (Set of 3)
24	53570	Assy.—Chuck & Aligner
25	12379	Hood—Chuck Head
26	04247	Mat
27	08293	Screw—Thumb (2)*
28	09704	Screw—Socket Hd. Cap. (3/8") (3)*

COMPLETE ASSY.

53563	Assy.—Chuck (Incl. Figs. 1 thru 24) (Cap. .230" to 5/8")

*Order Quantity As Needed

SIOUX TOOLS INC.
SIOUX CITY, IOWA, U.S.A. 51102

PRINTED IN U.S.A.

Base for 680, 684 & 689

Furnish Machine and Serial Number When Ordering Parts

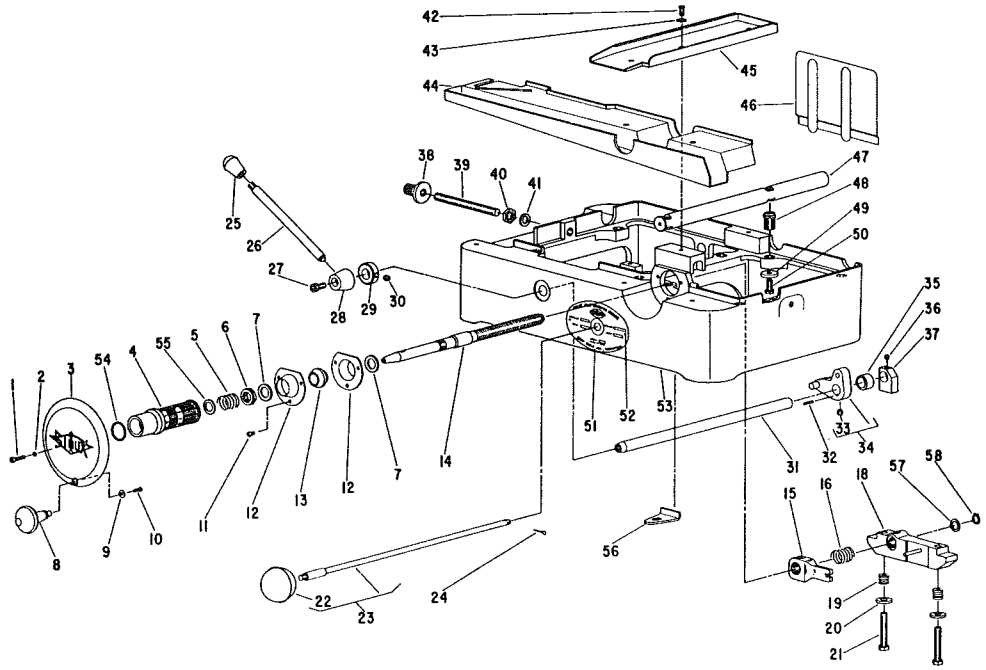

Figure	Part No.	Name
1	07114	Screw #10
2	09724	Washer—Lock #10
3	12222	Wheel—Hand
4	54440	Thimble—Micrometer
5	21303	Spring
6	09653	Nut—Lock 5/8"
7	25860	Washer (2)*
8	23081	Assy.—Stud & Knob
9	25196	Washer
10	05673	Screw #8
11	07205	Screw #10 (3)*
12	35348	Retainer—Feed Screw Bearing (2)*
13	10435	Bearing—Feed Screw
14	54399	Screw—Feed
15	11395	Dog—Auxiliary Feed Screw
16	21245	Spring—Tension
18	43439	Assy.—Cross Slide Clamp & Pin
19	21316	Spring—Tension (2)*
20	34824	Washer (2)*
21	09126	Screw 3/8" (2)*
22	14027	Knob
23	53537	Assy.—Switch Control Rod
24	30006	Pin—Cotter
25	14130	Knob
26	24212	Rod
27	08835	Screw 5/16"
28	44563	Head—Handle
29	34619	Spacer
30	08580	Screw 5/16"
31	44605	Shaft—Carriage Shifter
32	34359	Key—Shifter Arm
33	08579	Screw 5/16"
34	43380	Assy.—Shifter Arm
35	44644	Spacer—Switch Cam
36	08001	Screw 1/4"
37	44642	Cam—Switch
38	54436	Nut—Adjusting
39	34912	Stud—Carriage Stop
40	09613	Nut 7/16"
41	09796	Washer—Lock 7/16"
42	08120	Screw 1/4" (6)*
43	04246	Washer (5)*
44	14128	Tray—Drain (Front)
45	14127	Tray—Drain (Top)
46	53564	Assy.—Splash Shield
47	24201	Bar—Way (4)
48	54434	Bushing—Waybar (8)*
49	35366	Washer 5/16" (8)*
50	08823	Screw 5/16" (8)*
51	20413	Plate—Name
52	09955	Screw—Drive #4 (2)*
53	53569	Base (Incl. Fig's. 42(1), 47(4), 48(8), 49(8) & 50(8))
54	25155	Bearing—Washer
55	35375	Washer
56	53588	Assy.—Base Stop (Set of 4)
57	25921	Washer
58	21787	Ring—Retaining

COMPLETE ASS'YS.

53569	Assy.—Base & Ways Bars (Incl. Figs. 42(1), 47(4), 48(8), 49(8), 50(8) & 53)

*Order Quantity As Needed

SIOUX TOOLS INC.
SIOUX CITY, IOWA, U.S.A. 51102

Valve End Attachment for 680, 684 & 689 Valve Face Grinding Machines

Furnish Machine and Serial Number When Ordering Parts

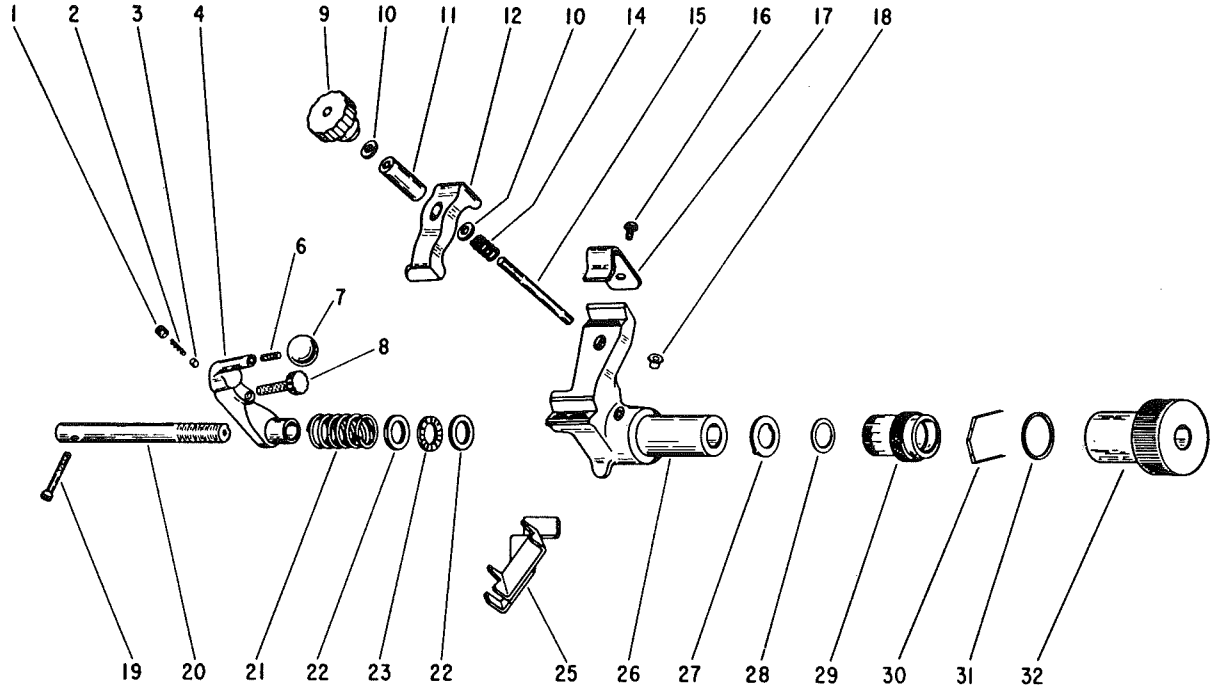

Figure	Part No.	Name
1	09275	Screw—7/16"
2	21219	Spring—Friction Slug
3	13020	Slug—Friction
4	11428	Arm—Dressing
6	24280	Stud—Ball
7	14008	Grip—Ball
8	1715	Diamond—Dressing
9	11403	Knob
10	25154	Washer (2)*
11	44661	Sleeve—Handle
12	11308	Clamp—Valve
14	21344	Spring—Lift
15	34362	Stud--Handle
16	06672	Screw—1/4"
17	25874	Clip—Valve Clamp
18	30073	Cup—Oil
19	08836	Screw—5/16"
20	54463	Stud—Swivel
21	21220	Spring—Valve Holder
22	25871	Washer—Thrust (2)*
23	10321	Bearing--Thrust
25	53589	Ass'm.—Chamfering Vee
26	43480	Ass'm.—Valve Holder & Plates
27	25657	Washer—Thrust
28	25155	Washer—Bearing
29	24162	Thimble
30	21224	Spring—Friction
31	25153	Washer—Crimped
32	24163	Knob—Adjusting

COMPLETE ASSY.

53574 Attachment—Valve End Grinding (Minus Fig. 25)

*Order Quantity As Needed

SIOUX TOOLS INC.
SIOUX CITY, IOWA, U.S.A. 51102

Carriage Plate, Base Plate & Motor Assy. for 680, 684 & 689

Furnish Machine and Serial Number When Ordering Parts

Figure	Part No.	Name
1	14467	Belt
2	15106	Motor (Specify Voltage)
3	09500	Nut—Hex 1/4" (2)*
4	08771	Screw—Hex Hd. Cap 5/16" (2)*
5	25069	Washer (7)*
6	35363	Base—Motor
7	30742	Mounting—Motor (3)*
8	09545	Nut—Hex 5/16" (2)*
9	35362	Sub Base—Motor
10	08835	Screw—Socket Hd. Cap (5/16")
11	44570	Cap—Swivel
12	25379	Washer—Spring
13	53579	Assy.—Base Plate (Incl. Figs. 33 & 34)
14	09590	Nut—Hex 3/8"
15	25053	Washer
16	11058	Lock—Chuck Head
17	24196	Stud
18	30073	Oiler (2)*
19	53580	Assy.—Carriage Plate (Incl. Figs. 17, 18, 30 & 31)
20	24311	Sleeve
21	44576	Post—Connecting Link
22	08288	Screw 1/4" (2)*
23	09104	Screw 3/8" (3)*
26	53572	Assy.—Carriage Plate Clamp (3)*
27	44571	Link—Connecting
29	08247	Screw 1/4"
30	44569	Lock—Swivel
31	54444	Stud
32	05016	Wick
33	30052	Oiler
34	54465	Protector—Cord
35	08245	Screw—Hex. Hr. Cap 1/4"
36	54335	Pulley—Motor (Incl. Fig. 37)
37	07188	Screw—Set
38	25561	Washer (2)*
39	09750	Washer—Lock (2)*

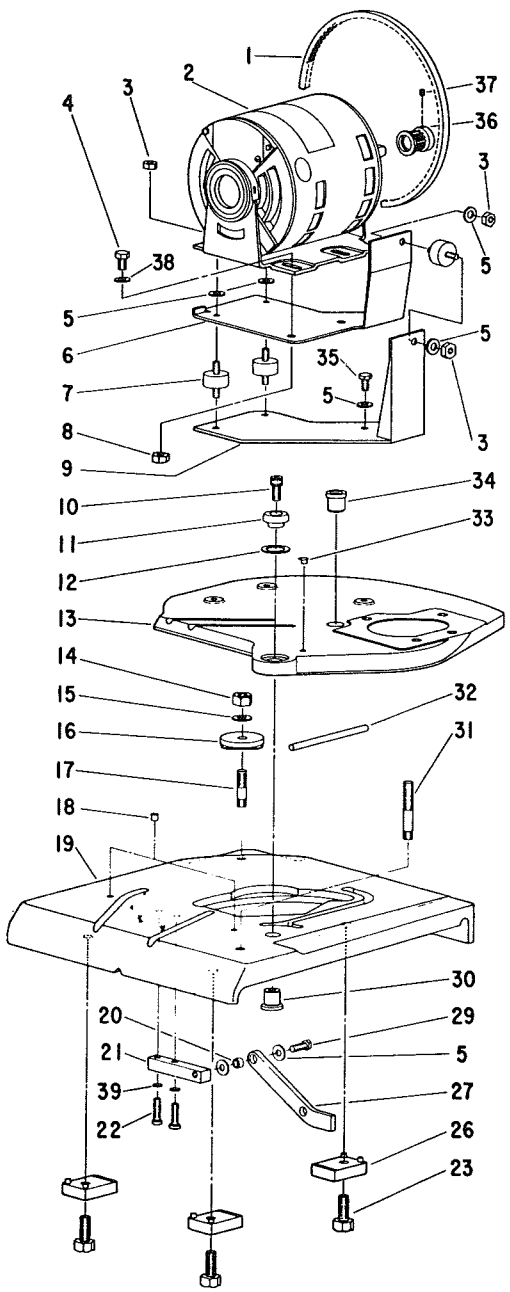

* Order Quantity Needed

PRINTED IN U.S.A.

Assy.-Coolant Pump for 680, 684 & 689

Furnish Machine and Serial Number When Ordering Parts

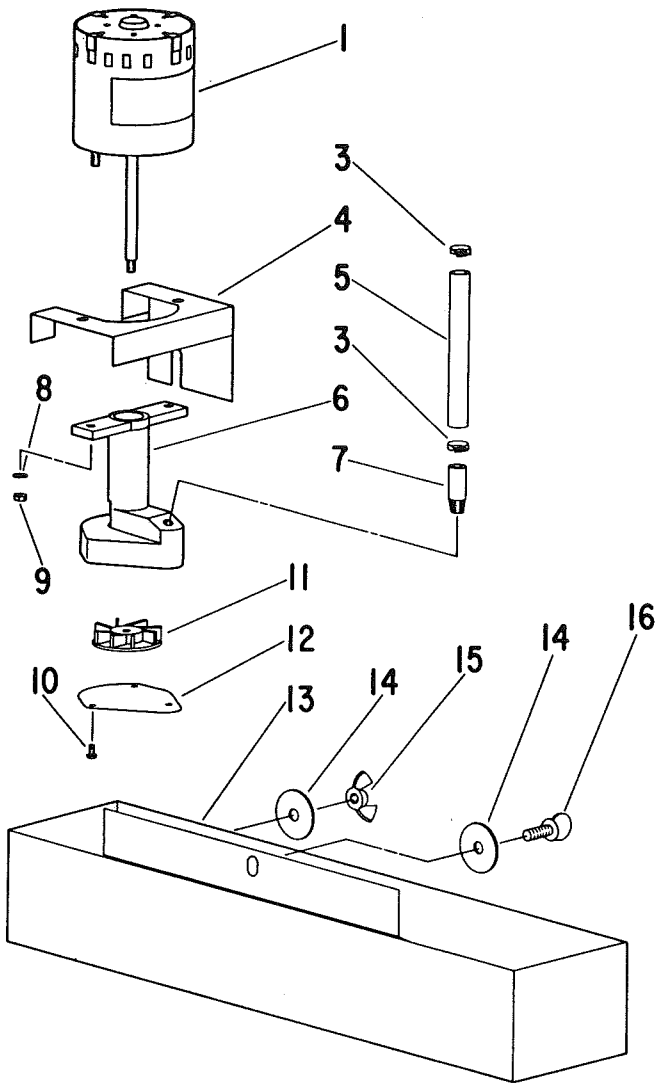

Figure	Part No.	Name
1	15124	Motor (Specify Voltage & Cycle)
3	30744	Clamp—Hose (2)*
4	35361	Mount—Pump
5	04248	Hose—Coolant
6	12385	Housing—Pump
7	30734	Tube—Adaptor
8	09712	Washer—Lock (2)*
9	09450	Nut—Steel Hex. (2)*
10	06235	Screw—Phil. Rd. Hd. (3)*
11	12386	Impeller
12	35368	Cover—Pump
13	53484	Tank—Coolant
14	25366	Washer (2)*
15	09571	Nut—Wing
16	08764	Screw—Thumb
	30698	Screen—Tank

COMPLETE ASSY.

	53568	Assy.—Coolant Pump (Incl. Figs. 1, 4, 6 thru 12) (Specify Voltage & Cycle)

*Order Quantity As Needed

PRINTED IN U.S.A.

OPTIONAL EQUIPMENT

SIOUX TOOLS

No. 656 Rocker Arm Attachment.

Assembly and Operating Instructions.

GRINDING ROCKER ARMS

Dress wheel with built-in dressing tool on right side of machine before mounting the SIOUX Rocker Arm Attachment.

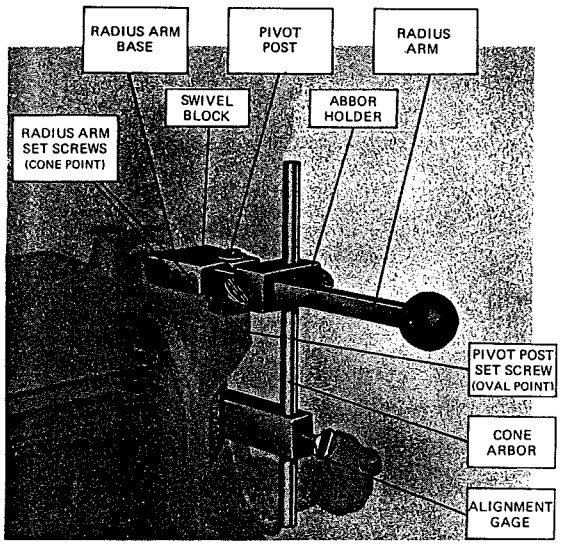

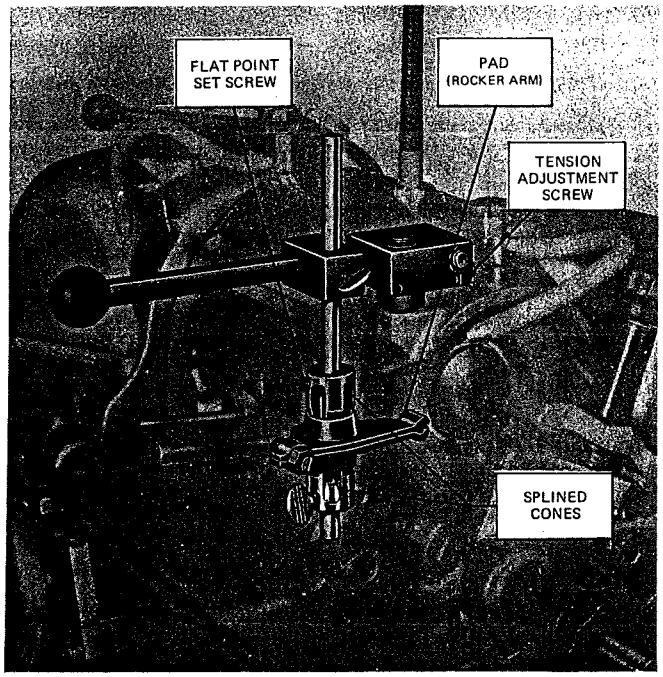

ASSEMBLY AND OPERATION

The grinding wheel should be properly dressed before mounting the Rocker Arm Attachment.

Place the pivot post, with its swivel block base and the radius arm base, in the $\frac{3}{8}$" diameter hole in the top of the right wheel guard, the flat on the post facing forward. Seat the post firmly and secure with the oval point set screw.

Place arbor holder on radius arm, cone arbor in the arbor holder and alignment gage on arbor. Place radius arm in the radius arm base. *Do not tighten the two cone point set screws.* Adjust height of alignment gage to the horizontal center of the grinding wheel and position the arbor holder to allow the recessed pad of the alignment gage to make full contact with the face of the grinding wheel. Hold recessed pad of alignment gage against face of grinding wheel while tightening three thumb screws. Hold alignment gage firmly against wheel face and tighten the two cone point set screws locking the radius arm.

Remove alignment gage.

Install the splined cone (with flat point set screw) on arbor, small end down. Place rocker arm on arbor and adjust upper cone position to bring rocker arm pad to horizontal center of wheel. Place lower cone on arbor to firmly hold rocker arm. Position arbor holder to grind full pad area.

Wet grind rocker arms by lightly pressing arm pad against grinding wheel. Swivel attachment left and right until desired surface is attained. The radius arm can be swung upward to facilitate loading and unloading. Proper adjustment of the tension screw will allow the operator to move the radius arm up or down—but not drop accidentally.

This pdf incorporates the following model numbers:

680, 684, 689, 649, 115V, 230V, 208, 220V, 656